USN [ ][ ][ ][ ][ ][ ][ ][ ][ ][ ] **[22AN53]**

FIFTH SEMESTER B.Tech EXAMINATION, DECEMBER-2024

AIRCRAFT STRUCTURES

Time: 3 Hours **Maximum Marks: 100**

Instructions: **i.** Missing data may be suitably assumed.

ANSWER ALL QUESTIONS

		PART-A	**5 x2=10**		
1.	**a.**	List the aircraft structural members of the wings and nomenclate them with the help of a figure.	L1	CO1	**02**
	b.	State the assumptions of considering the thick-walled sections as a thin-walled beams, explain what is need for considering thin-walled section in aircraft structures.	L2	CO2	**02**
	c.	Write the boundary conditions for the plate with **i** simply supported at all edges **ii** fixed at all edges with a neat sketch.	L2	CO3	**02**
	d.	Write the functions of booms and skin in terms of stress carrying capabilities, perform a sample panel idealization with neat sketch.	L2	C04	**02**
	e.	State the principles of stiffener/web construction.	L2	CO5	**02**
		PART-B	**6 X 5=30**		
2.	**a.**	Differentiate between monocoque and semi-monocoque structure with neat sketch and explain the purpose of each of the internal structural member.	L2	CO1	**05**
		OR			
	b.	Discuss the concept of steady pullout and correctly banked turn for the maneuvers associated with normal accelerations with neat sketch.	L2	CO1	**05**
3.	**a.**	Determine the direct stresses parallel to the z axis in the flanges 1 and 2 for the figure shown. Cross-sectional area of each flange is 400 mm^2 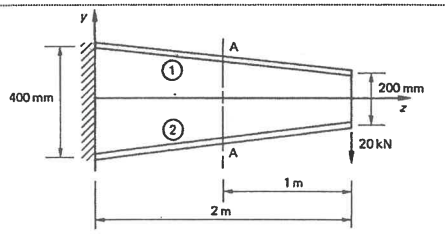	L3	CO2	**05**
		OR			
	b.	Determine the moment of inertia of the figure shown below considering each of numbers as booms.	L3	CO2	**05**

JAIN (Deemed-to-be University) Learning Resource Centre Jain Global Campus Ramanagara-562

		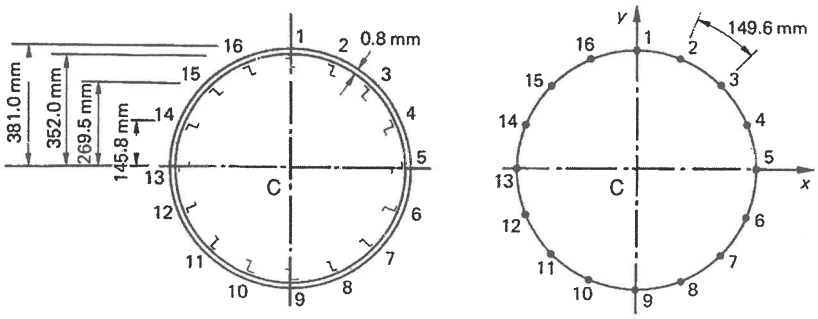			
4.	**a.**	For the figure in question 3b displayed above, determine the bending stress and draw the variation around the fuselage shown.	L3	CO2	**05**
		OR			
	b.	A rectangular plate a × b, simply supported along each edge, possesses a small initial curvature in its unloaded state given by $$w_0 = A_{11} sin\frac{\pi x}{a} sin\frac{\pi y}{b}$$ Determine, using the energy method, its final deflected shape when it is subjected to a compressive load N_x per unit length along the edges $x = 0, x = a$.	L3	CO2	**05**
5.	**a.**	Consider a geometry shown in the figure RHS, assume the web as a thin-walled plate supported by flanges (as beam). Consider the material to be Mild Steel. Determine the flexural rigidity of the flanges and web. Assume necessary constant values required. 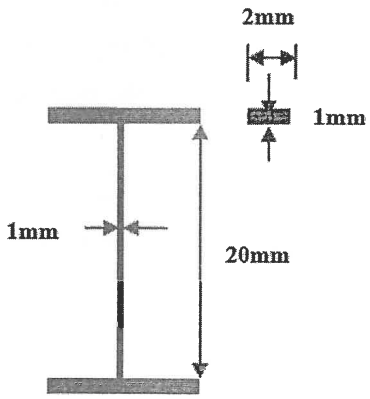	L3	CO3	**05**
		OR			
	b.	A panel, comprising flat sheet and uniformly spaced Z-section stringers, a part of whose cross-section is shown in figure, is to be investigated for strength under uniform compressive loads in a structure in which it is to be stabilized by frames a distance l apart, l being appreciably greater than the spacing b. State the modes of failure which you would consider and how you would determine appropriate limiting stresses.	L3	CO3	**05**

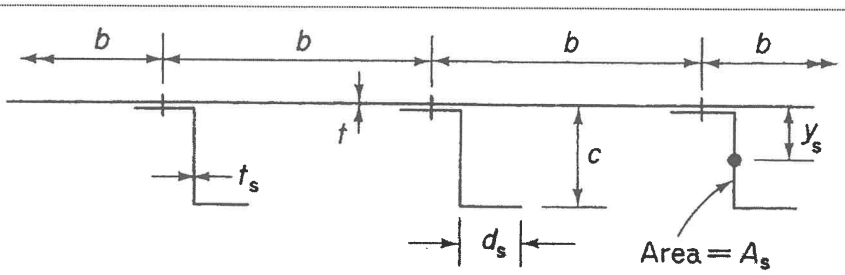

6.	**a.**	The doubly symmetrical fuselage section shown in figure has been idealized into an arrangement of direct stress carrying booms and shear stress carrying skin panels; the boom areas are all 150 mm^2. Calculate the direct stresses in the booms if bending moment carried is 100KNm, **ignore shear load of 50kN.**	L3	CO4	**05**

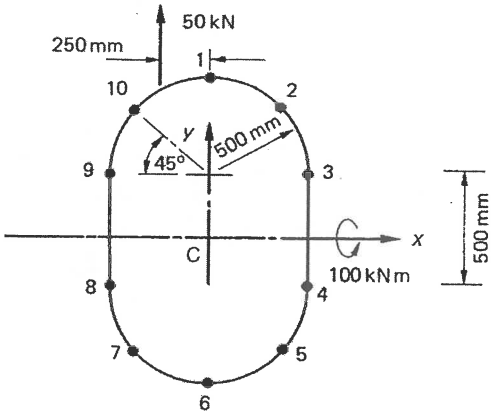

		OR			
	b.	Calculate the rate of twist $\frac{d\theta}{dz}$ the three-cell wing section shown in figure, when it is subjected to an anticlockwise torque of 11.3kNm. choose G_{REF} = 27 600 N/mm^2	L3	CO4	**05**

Wall	Length (mm)	Thickness (mm)	G (N/mm^2)	Cell area (mm^2)
12°	1650	1.22	24 200	$A_I = 258\,000$
12^i	508	2.03	27 600	$A_{II} = 355\,000$
13, 24	775	1.22	24 200	$A_{III} = 161\,000$
34	380	1.63	27 600	
35, 46	508	0.92	20 700	
56	254	0.92	20 700	

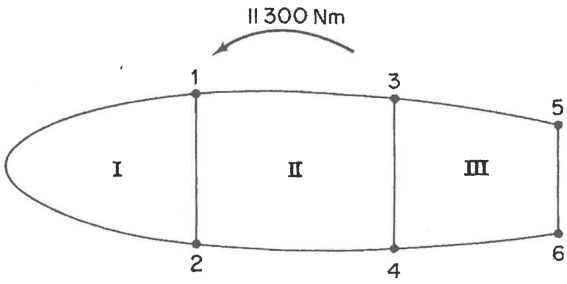

7.	**a.**	For the figure shown, determine the shear flow in section 1-2, 2-3, 3-1 i.e., q_{12}, q_{23}, q_{31}	L3	CO5	**05**

		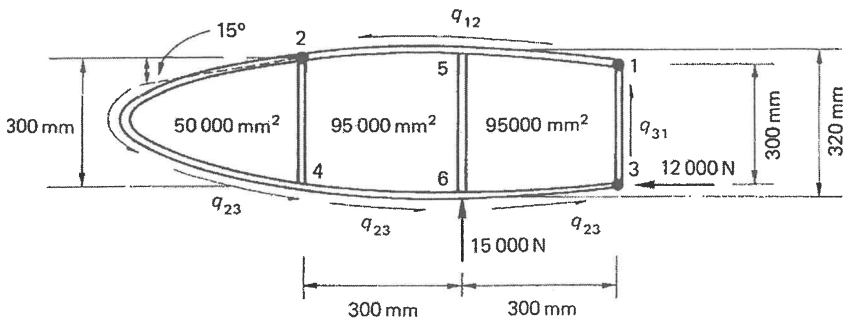			
		OR			
	b.	Determine the shear flow distribution in web panels for the figure given in the question 7. a.	L3	CO5	**05**
		PART-C	**6 X 10=60**		
8.	**a.**	Using method of joints, determine the axial forces in the members CH, DG, CG. 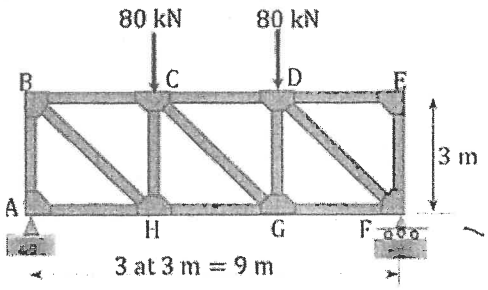	L3	CO1	**10**
		OR			
	b.	Using method of sections for the figure in question 8a, determine the axial forces in the members CH, DG, CG.	L3	CO1	**10**
9.	**a.**	Determine the deflection curve and the deflection of the free end of the cantilever shown in figure. The cantilever has a doubly symmetrical cross-section. 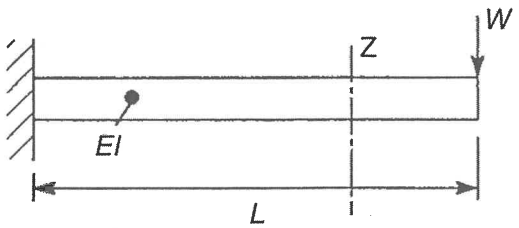	L3	CO2	**10**
		OR			
	b.	Figure shows a simply supported beam carrying a concentrated load W at mid-span. Determine the deflection curve of the beam and the maximum deflection if the beam section is doubly symmetrical, 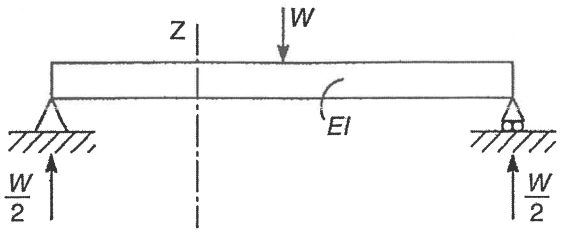	L3	CO2	**10**

10.	**a.**	Determine the deflection curve and the deflection of the free end of the cantilever shown in Figure. The cantilever has a doubly symmetrical cross-section. 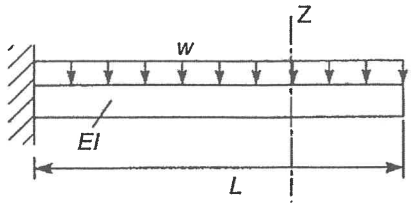	L3	CO2	**10**
		OR			
	b.	A thin rectangular plate of length a and width 2a is simply supported along the edges x = 0, x = a, y = −a and y = +a. The plate has a flexural rigidity D, a Poisson's ratio of 0.3 and carries a load distribution given by $$q(x,y) = q_0 \sin\left(\frac{\pi x}{a}\right)$$ If the deflection of the plate may be represented by the expression $$w = \frac{qa^4}{D\pi^4}\left(1 + A\cosh\frac{\pi y}{a} + B\frac{\pi y}{a}\sinh\frac{\pi y}{a}\right)\sinh\frac{\pi x}{a}$$ determine the values of the constants A and B.	L3	CO3	**10**
11.	**a.**	Explain the concept of inelastic buckling and derive the expression for k and a/b and draw the curves for the cases, loaded edges clamped, loaded edges simply supported and unloaded edges clamped.	L2	CO3	**10**
		OR			
	b.	For the following sections shown below, write their nomenclature and name the sections, identify their axis of symmetry, also determine the empirical constant 'g' for the following figures. 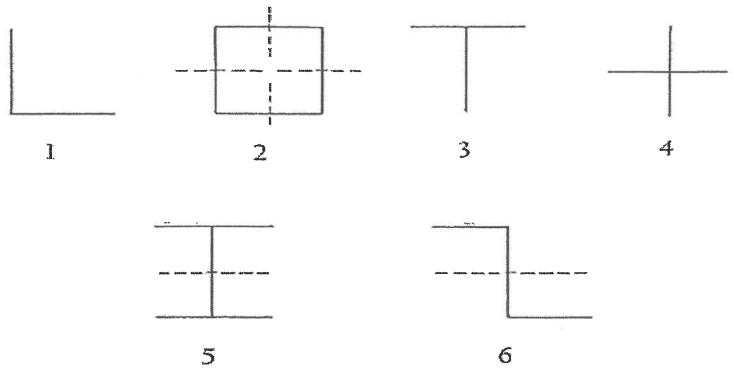	L3	CO3	**10**
12.	**a.**	For the figure given in question 6.a, determine the direct stresses in the booms and the shear flows in the panels when the section is subjected to a shear load of 50kN and a bending moment of 100kN m.	L3	CO4	**10**

		OR			
	b.	For the figure given in question 6.b. determine the shear flow the section.	L3	CO4	**10**
13.	**a.**	Determine the shear flow distribution in the web of the tapered beam shown in figure, at a section midway along its length. The web of the beam has a thickness of 2mm and is fully effective in resisting direct stress. The beam tapers symmetrically about its horizontal centroidal axis and the cross-sectional area of each flange is 400mm^2. 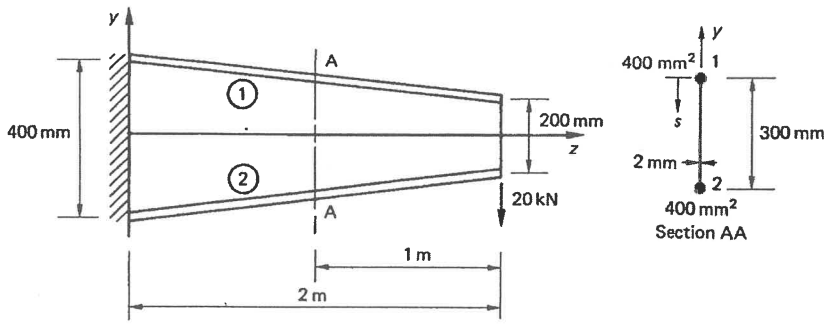	L3	CO5	**10**
		OR			
	b.	For the figure given in question 3.b, a vertical shear load of 100kN is applied at a distance of 150mm from the vertical axis of symmetry towards right hand side. Calculate the distribution of shear flow in the section.	L3	CO5	**10**